UMONS
Université de Mons

Utilization of heat pumps in low energy-efficient buildings

Eric Dumont, University of Mons

7nde Warmtepomp Symposium
Sint-Katelijne Waver, 10 september 2014

POLYTECH MONS

energy
UMONS RESEARCH INSTITUTE FOR ENERGY

Context

- Heat pumps (HP's) can play a role with respect to renewable energy production in Europe (2020 perspective: 13%)
- But… European Directive defines a minimum efficiency for HP's to be considered as renewable energy sources
- Efficient HP ? → saving 15% of primary energy

  → Easy to do in new buildings

  → Possible in old (not energy-efficient) buildings ? (majority of building stock in Belgium)

Back to Basics…

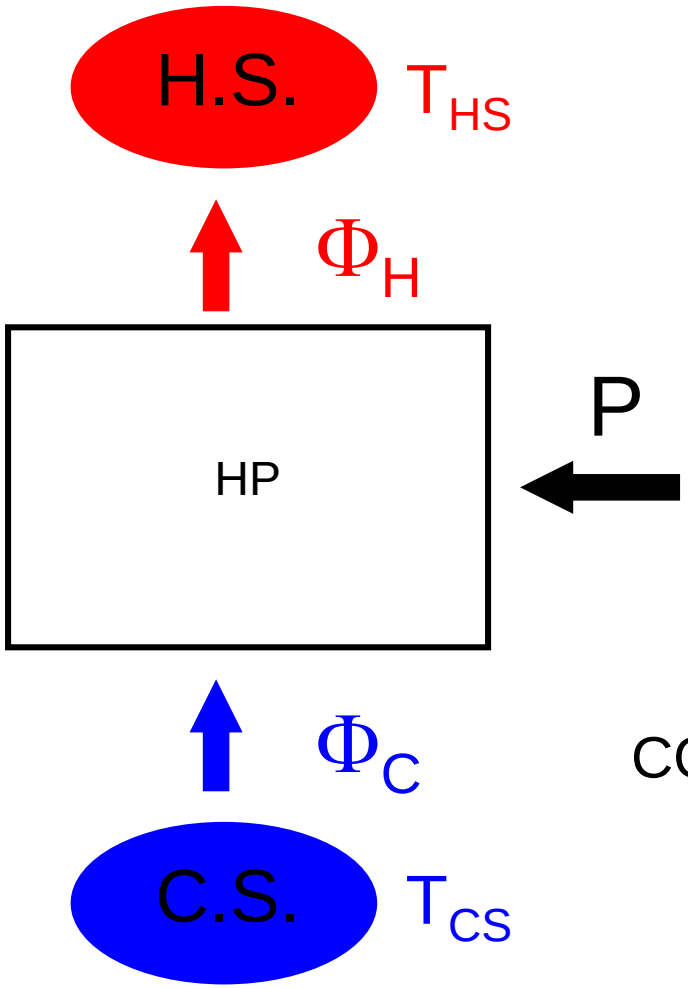

Assisted use of free energy source

Coefficient of performance :

$COP = \Phi_H / P$

$COP_{IDEAL} = T_{HS} / (T_{HS} - T_{CS})$

Back to Basics…

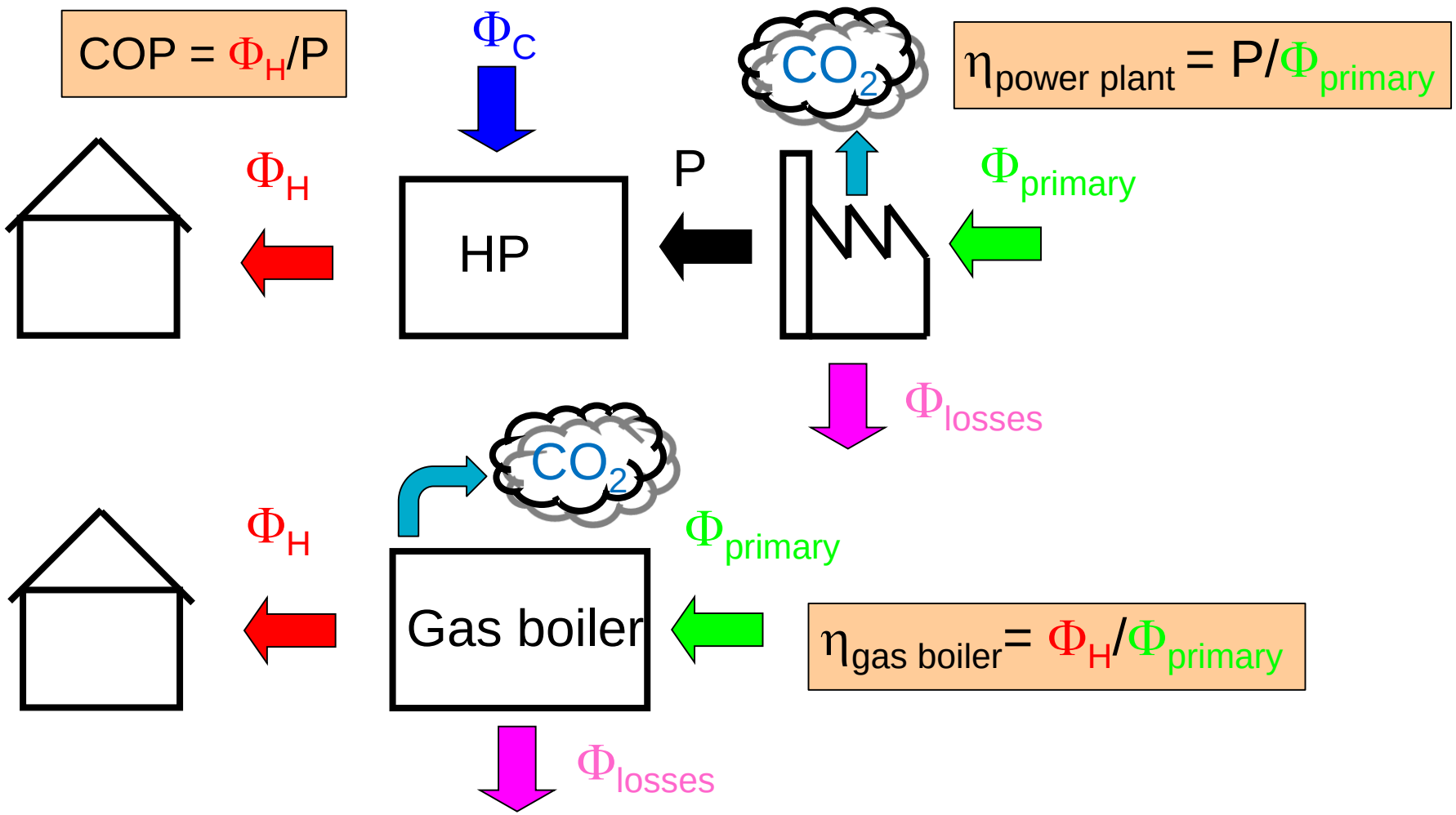

Back to Basics…

energy
UMONS RESEARCH INSTITUTE FOR ENERGY

- Energy savings (primary energy):

$$\Phi_{primary} = \Phi_H /(\eta_{power\ plant}\, COP)$$

$$\Phi_{primary} = \Phi_H /(\eta_{gas\ boiler})$$

$$\eta_{power\ plant}\, COP > \eta_{gas\ boiler}$$

$$\eta_{power\ plant}\, COP > 1.15 \text{ (European Directive)}$$

- COP depends on source and sink temperatures, which vary during one year: use of an average COP

SPF (seasonal performance factor)

European Directive: SPF > 2.88 (with $\eta_{power\ plant}$ =0.400)

SPF > 2.53 (with $\eta_{power\ plant}$ =0.455)

Standard HP's

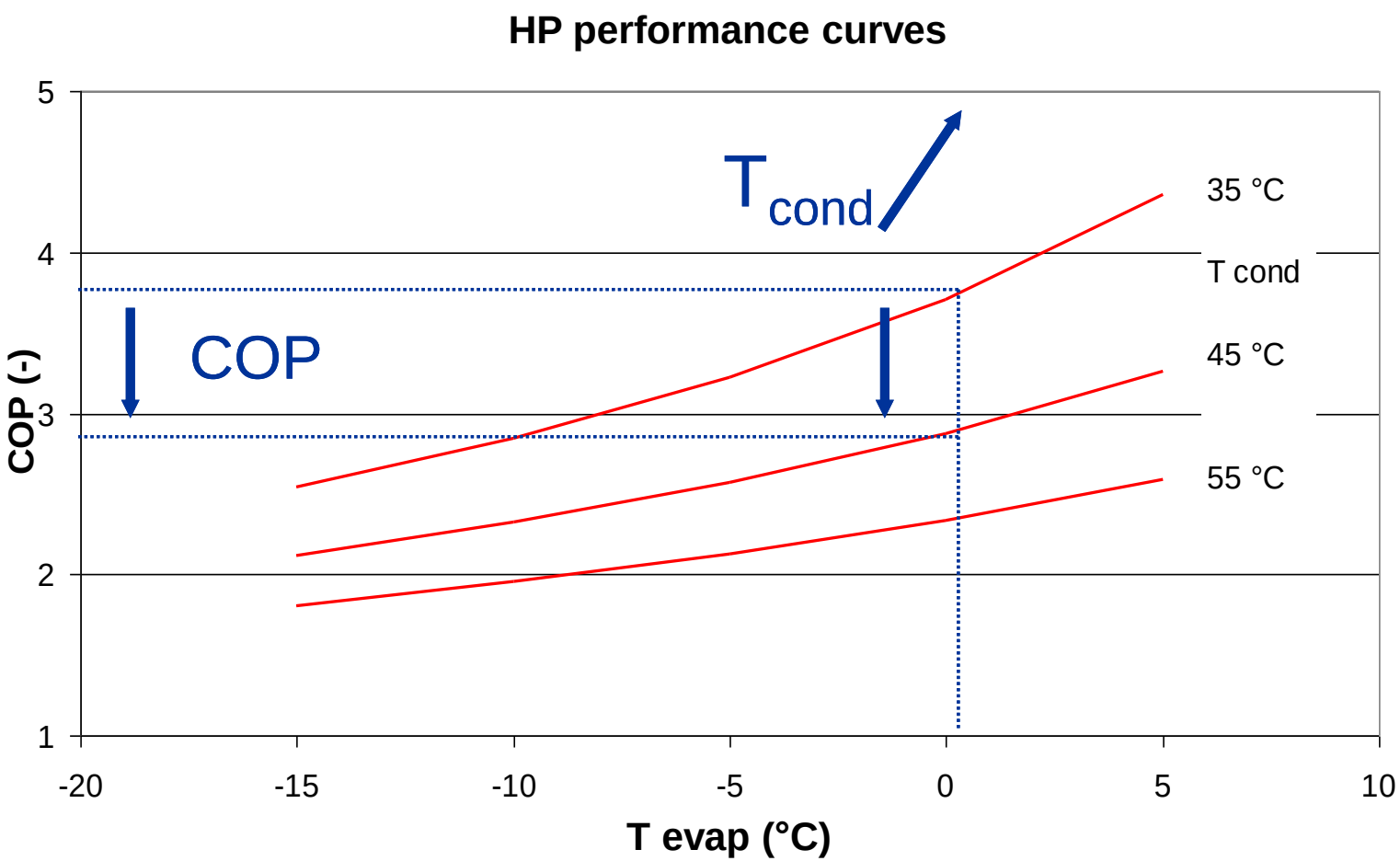

High temperature HP's

- Combination of HP and heat distribution system defines hot water temperature !
- If water temperature not high enough for the insulation level of the building, comfort indoor temperature will not be reached !

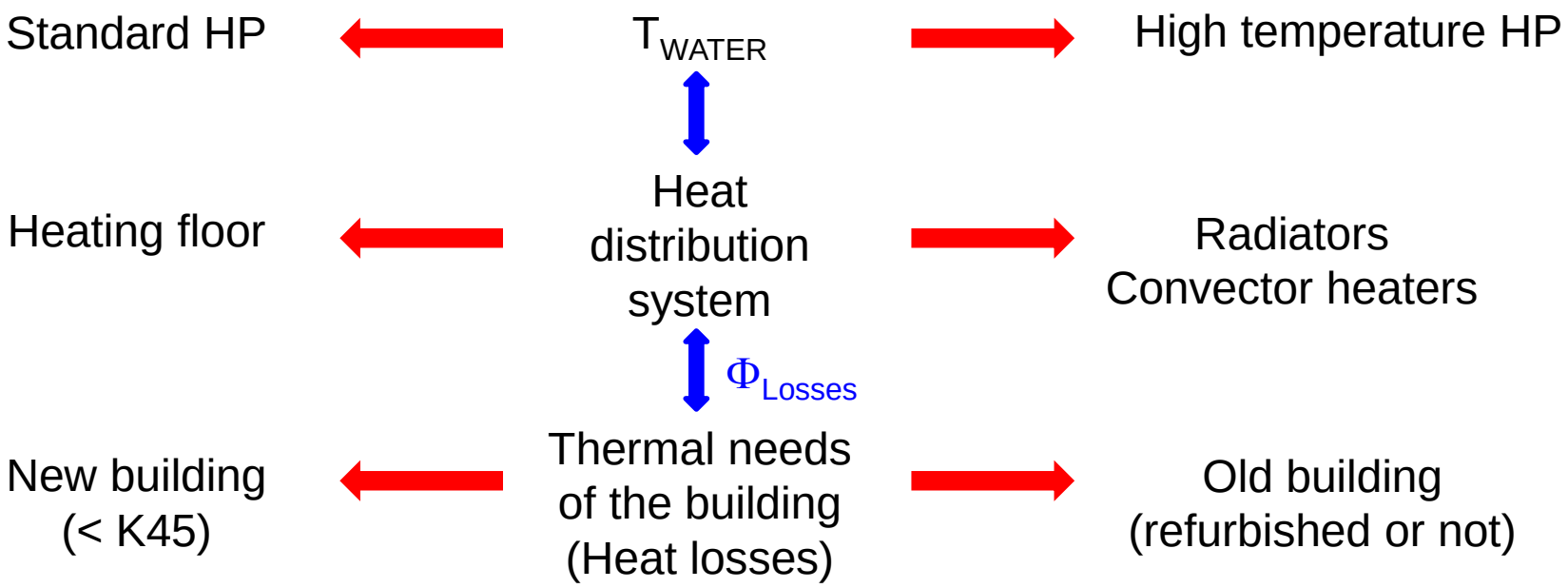

High temperature HP's

energy
UMONS RESEARCH INSTITUTE FOR ENERGY

- Need to use HP's with more complex thermodynamic cycles to increase COP values when HP's are combined with (hot water) radiators
- Injection cycle HP's on the market for about 10 years

Example :

Injection cycle HP installed in Châtelet (Belgium) monitored by UMONS since March 2010

With convector heaters, SPF = 2.8 to 3.0

- Cascade cycle HP's on the market for about 3-4 years

Cascade cycle HP: Introduction

energy
UMONS RESEARCH INSTITUTE FOR ENERGY

- Monitoring of an Air-to-Water HP (AJ-Tech) which uses an original cascade cycle with capacity-controlled compressor
- HP installed in a non-insulated single-family dwelling built in 1973 (K98) in Froyennes (Belgium)

Cascade cycle HP: Introduction

energy
UMONS RESEARCH INSTITUTE FOR ENERGY

- HP used for space heating (existing radiators) and domestic hot water production (DHW)
- Nominal heat flow rate = 14.5 kW
- Old gas boiler kept for coldest days in winter (boiler switched on and HP switched off).
- HP fully instrumented for performance monitoring since October 2013
- Development of a model of the HP for performance optimization

Cascade cycle HP: Operation

- Mode #1

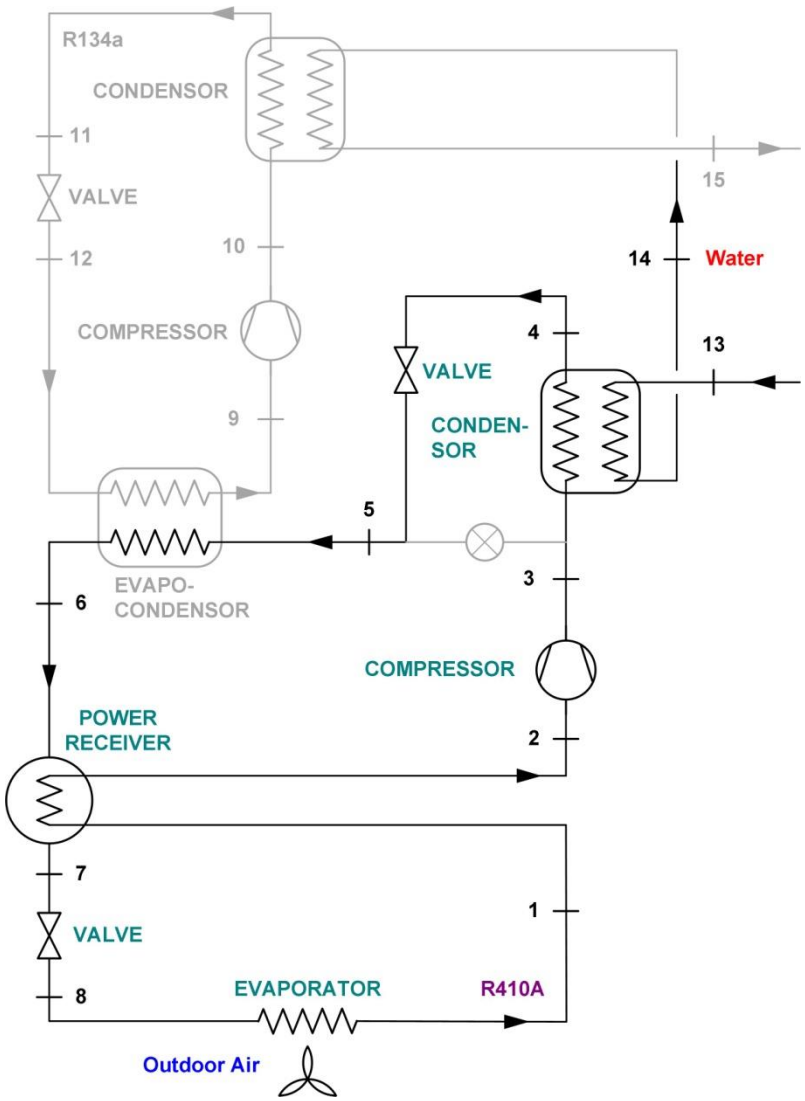

Cascade cycle HP: Operation

- Mode #3

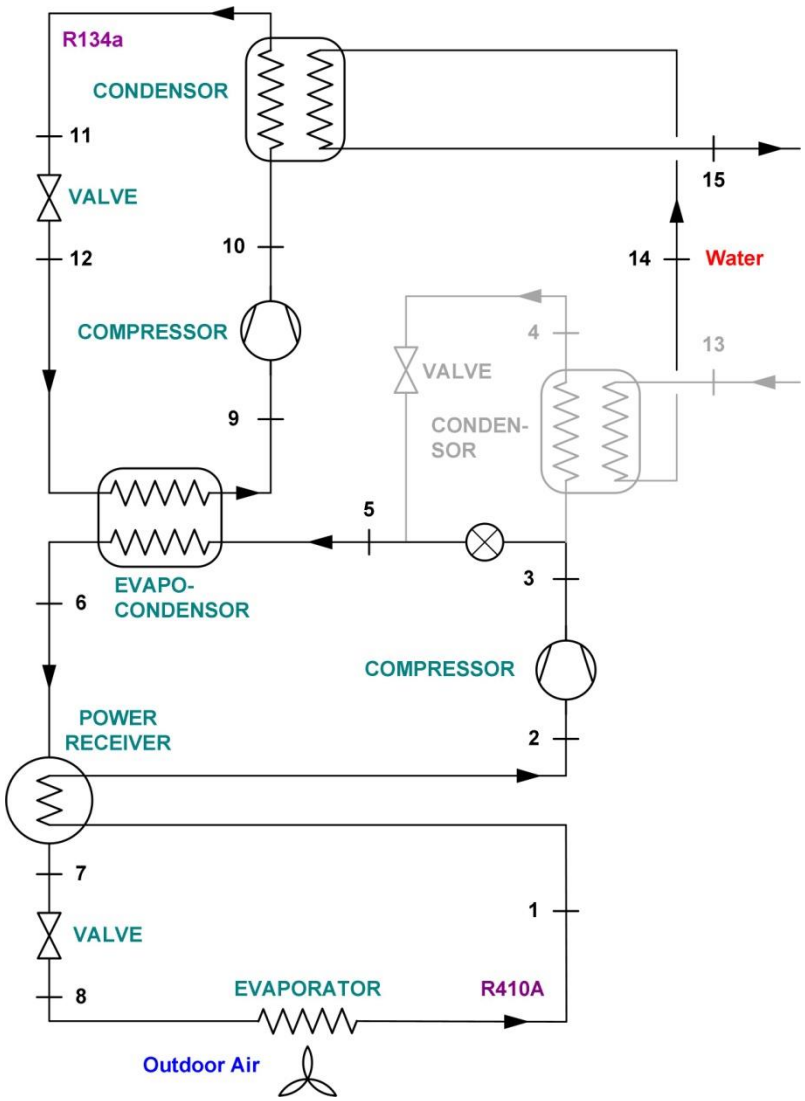

Cascade cycle HP: Operation

- Mode #2

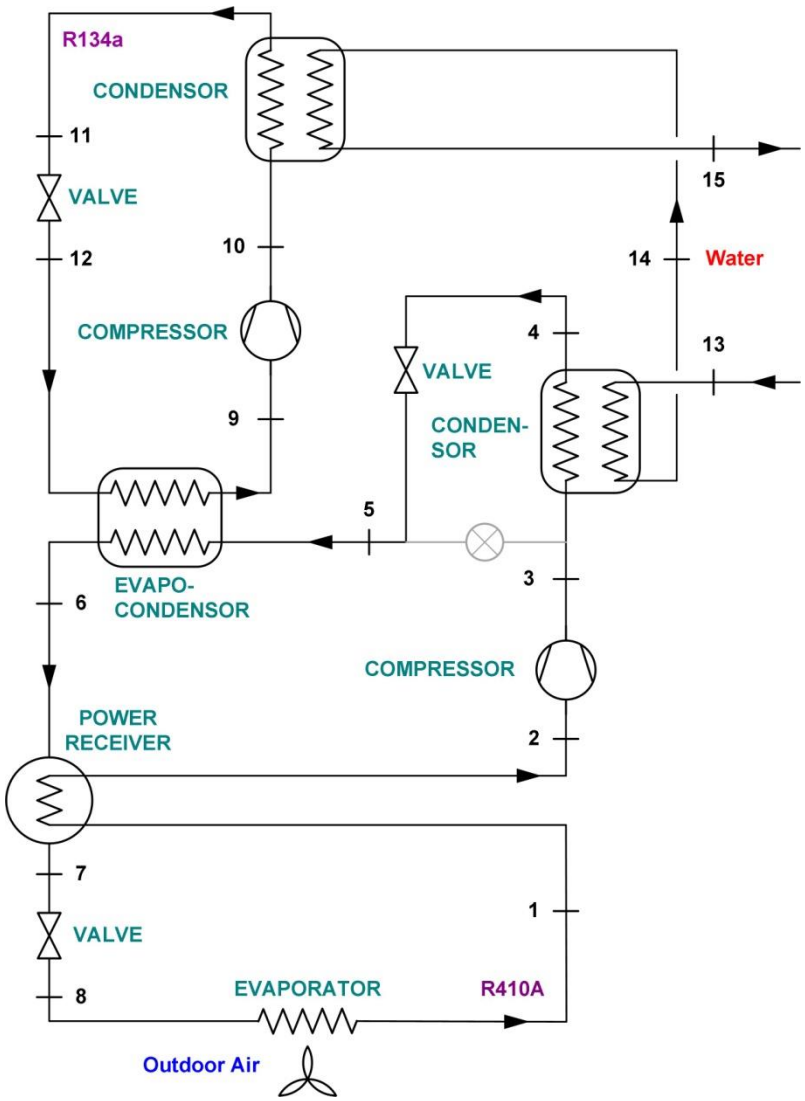

Cascade cycle HP: Performance

- Model mode #1 (nominal speed)

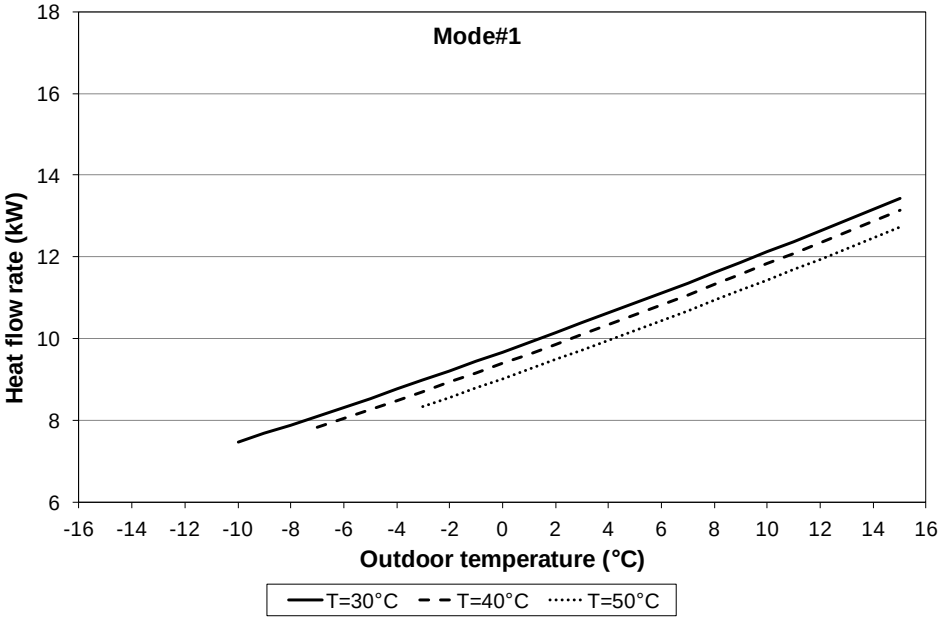

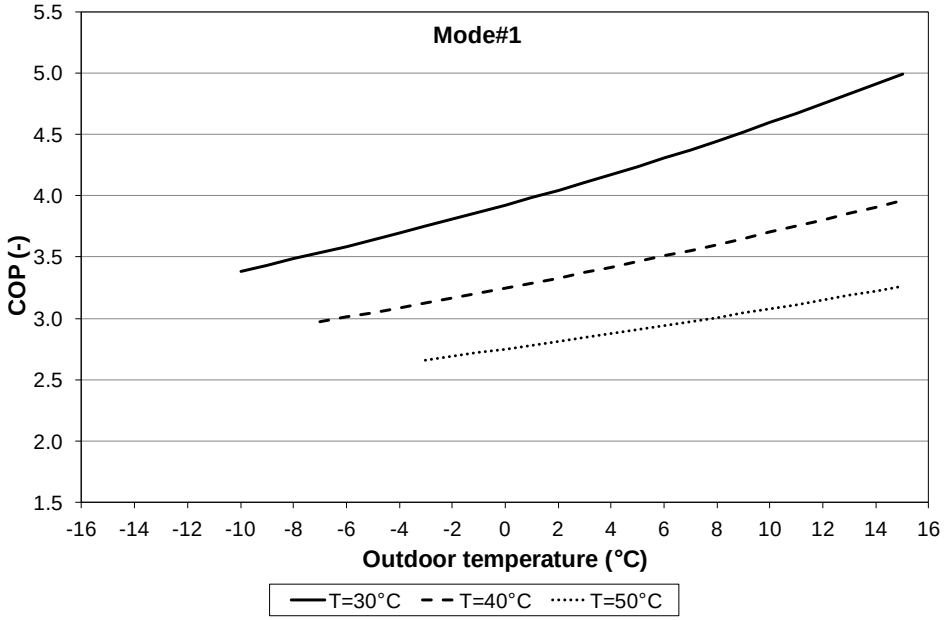

Cascade cycle HP: Performance

- Model mode #3 (nominal speed)

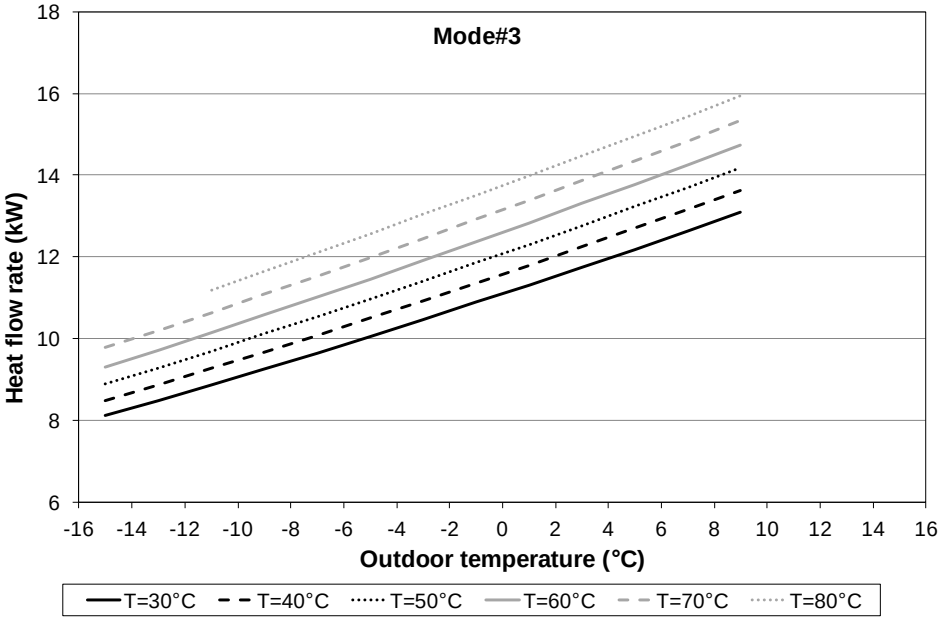

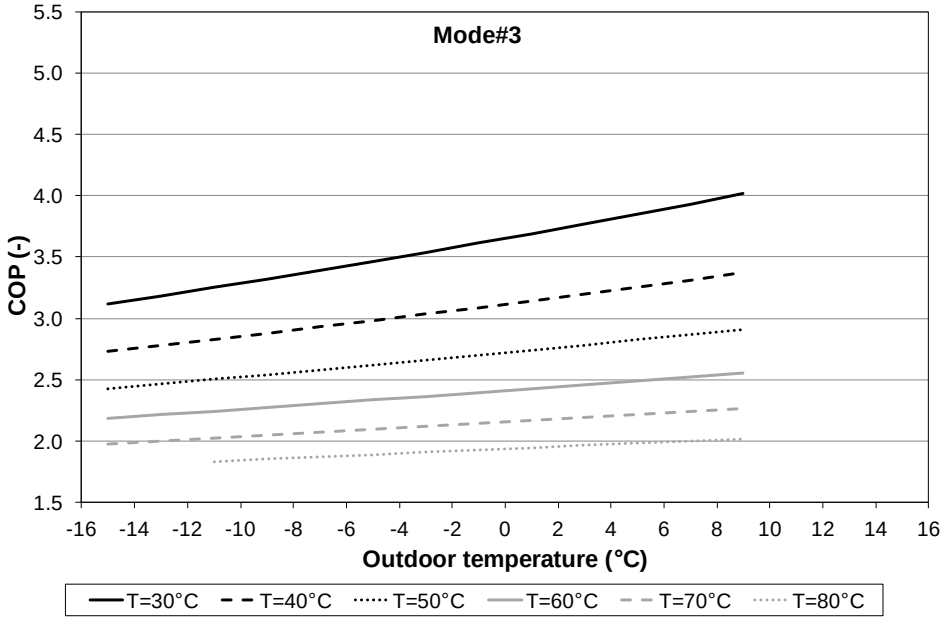

Cascade cycle HP: Performance

- Model mode #2 (nominal speed)

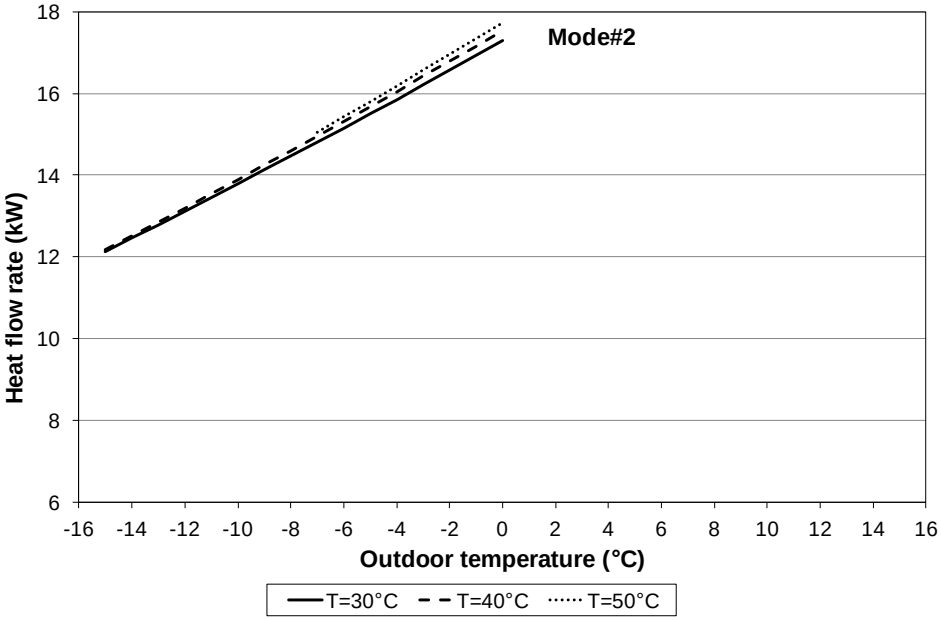

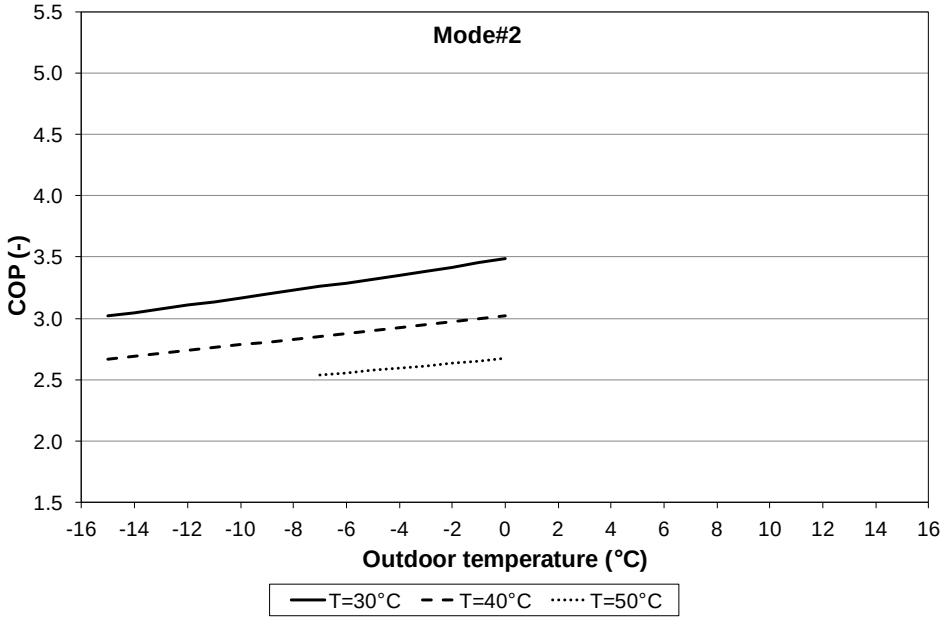

Cascade cycle HP: Control

energy
UMONS RESEARCH INSTITUTE FOR ENERGY

- The HP R410A compressor speed is controlled to adapt the heat flow rate to the heat load and/or to maximize the COP

T outdoor (°C) \ Water temperature (°C)	<25	25-35	36-45	46-55	56-65	66-75	76-85
<-15	Mode 2	Mode 2	Mode 3	Mode 3	Mode 3	Mode 3	Mode 3
-15 to -10	Mode 2	Mode 2	Mode 3	Mode 3	Mode 3	Mode 3	Mode 3
-9 to -5	Mode 2	Mode 2	Mode 2	Mode 3	Mode 3	Mode 3	Mode 3
-4 to 0	Mode 1	Mode 1 or 2	Mode 1 or 2	Mode 2	Mode 3	Mode 3	Mode 3
1 to 5	Mode 1	Mode 1 or 2	Mode 1 or 2	Mode 1 or 2	Mode 3	Mode 3	Mode 3
6 to 10	Mode 1	Mode 1 or 2	Mode 1 or 2	Mode 1 or 2	Mode 3	Mode 3	Mode 3
11 to 15	Mode 1	Mode 1	Mode 1	Mode 1	Mode 3	Mode 3	Mode 3
>15	Mode 1	Mode 1	Mode 1	Mode 1	Mode 3	Mode 3	Mode 3

Mode 1 | Mode 1 or 2 | Mode 2 | Mode 3

Cascade cycle HP: Control

UMONS RESEARCH INSTITUTE FOR ENERGY

- Manufacturer performance curves (variable speed control)

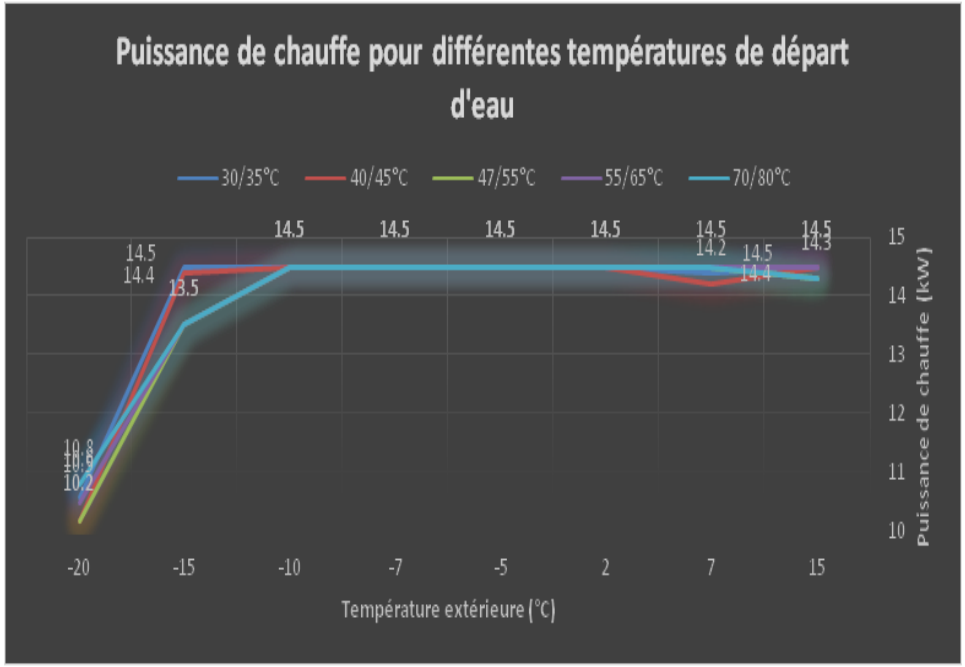

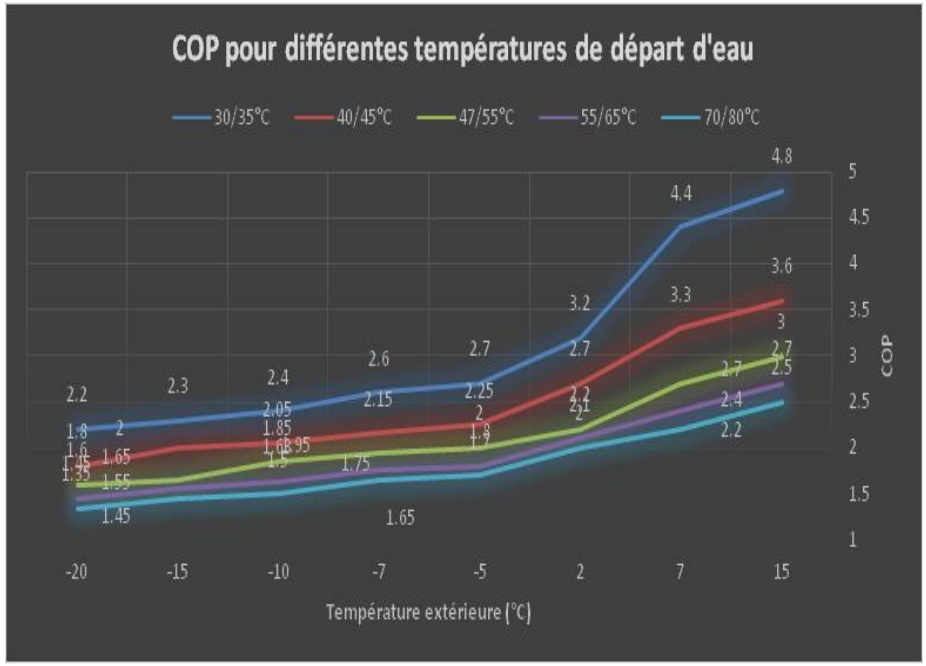

Cascade cycle HP: Radiators

UMONS RESEARCH INSTITUTE FOR ENERGY

- Combination of HP modes and water temperature in the radiator (♦)
- $T_{WATER} = 60-1.75*T_{OUTDOOR}$

Water temperature (°C)

T outdoor (°C)	<25	25-35	36-45	46-55	56-65	66-75	76-85
<-15							♦
-15 to -10							♦
-9 to -5						♦	
-4 to 0					♦		
1 to 5				♦			
6 to 10			♦	♦			
11 to 15			♦				
>15		♦					

Mode 1 | Mode 1 or 2 | Mode 2 | Mode 3

Cascade cycle HP: Monitoring

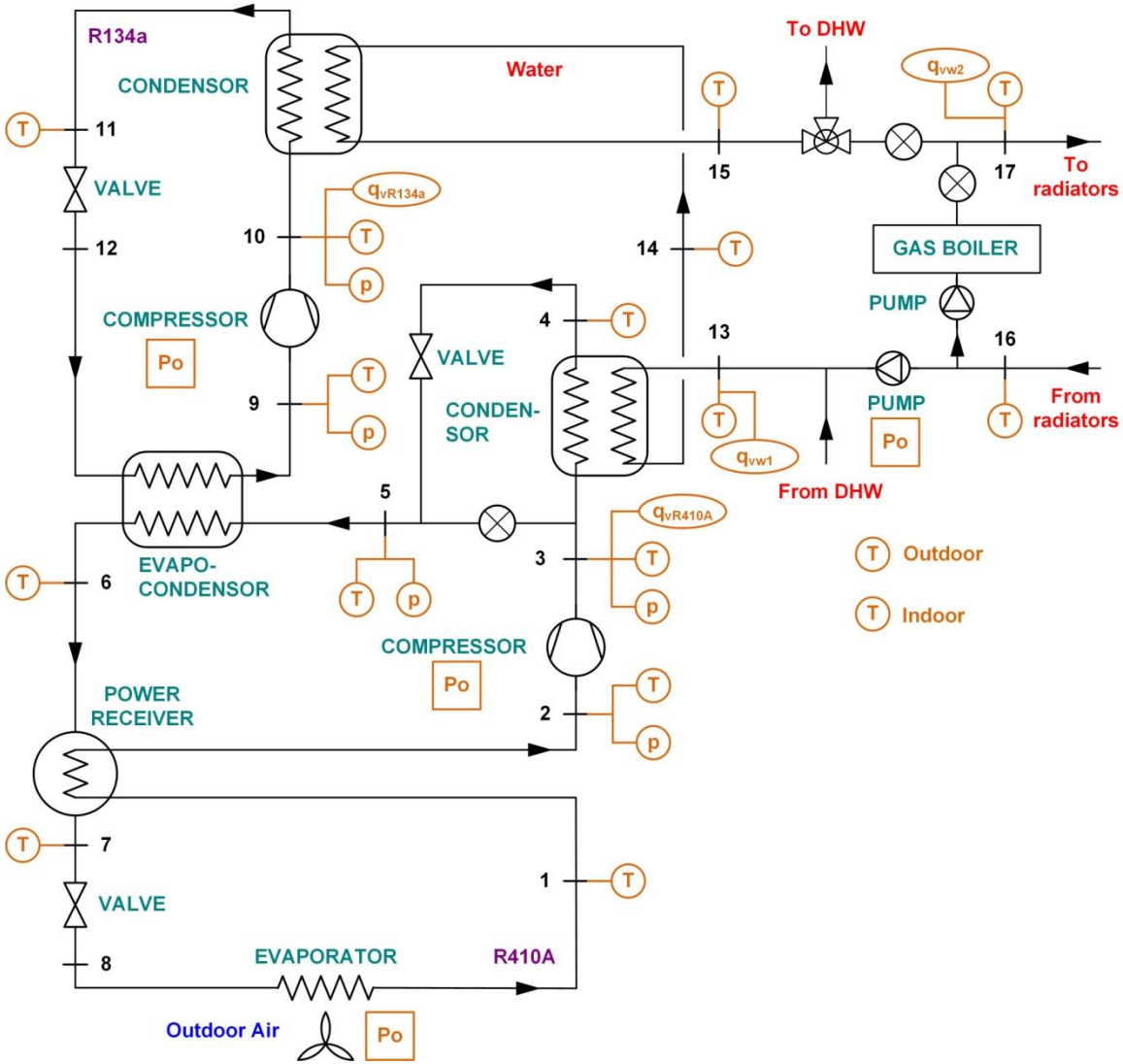

Cascade cycle HP: Results

- Data of December 12, 2013

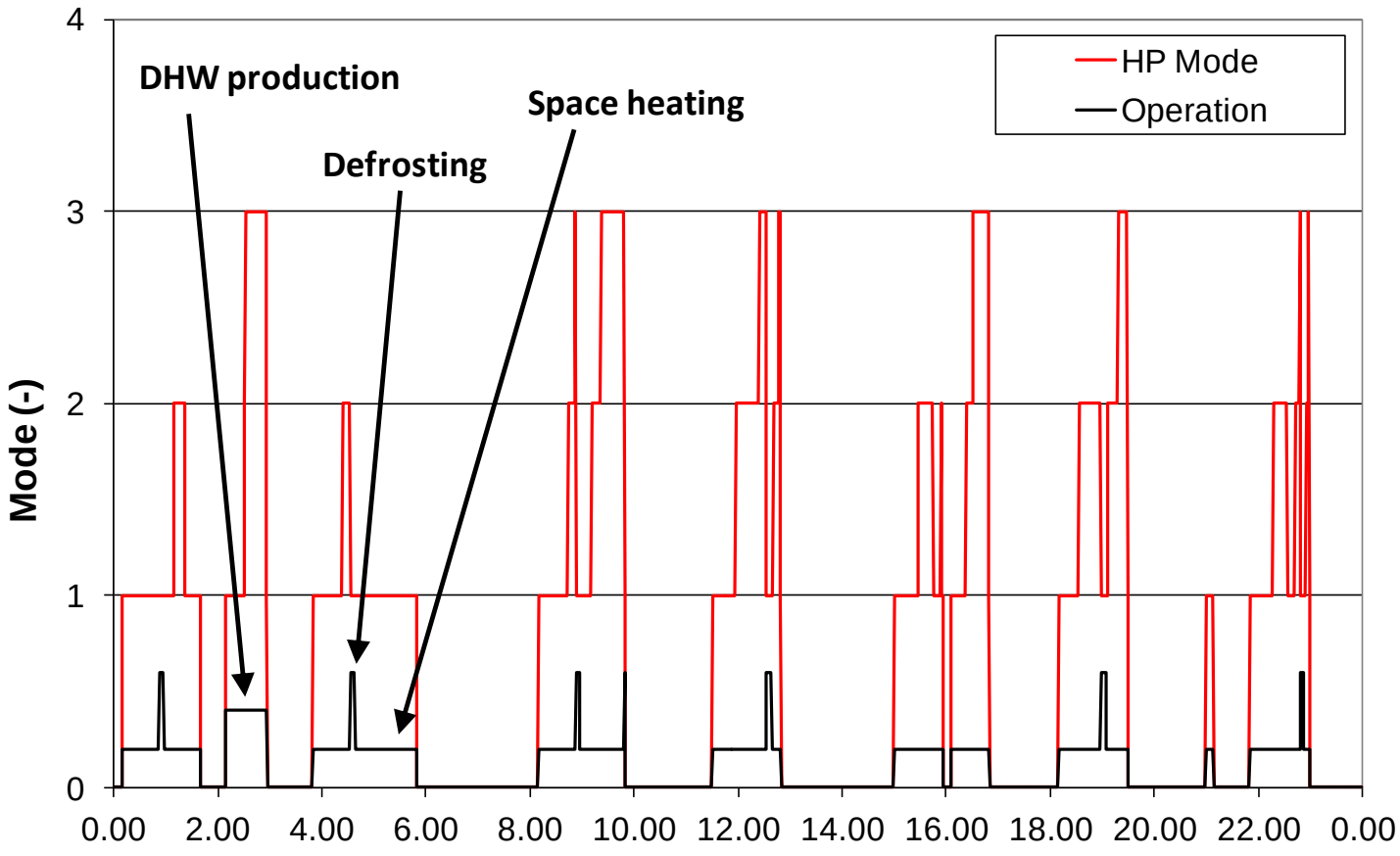

Cascade cycle HP: Results

energy
UMONS RESEARCH INSTITUTE FOR ENERGY

- Data of December 12, 2013 (space heating)

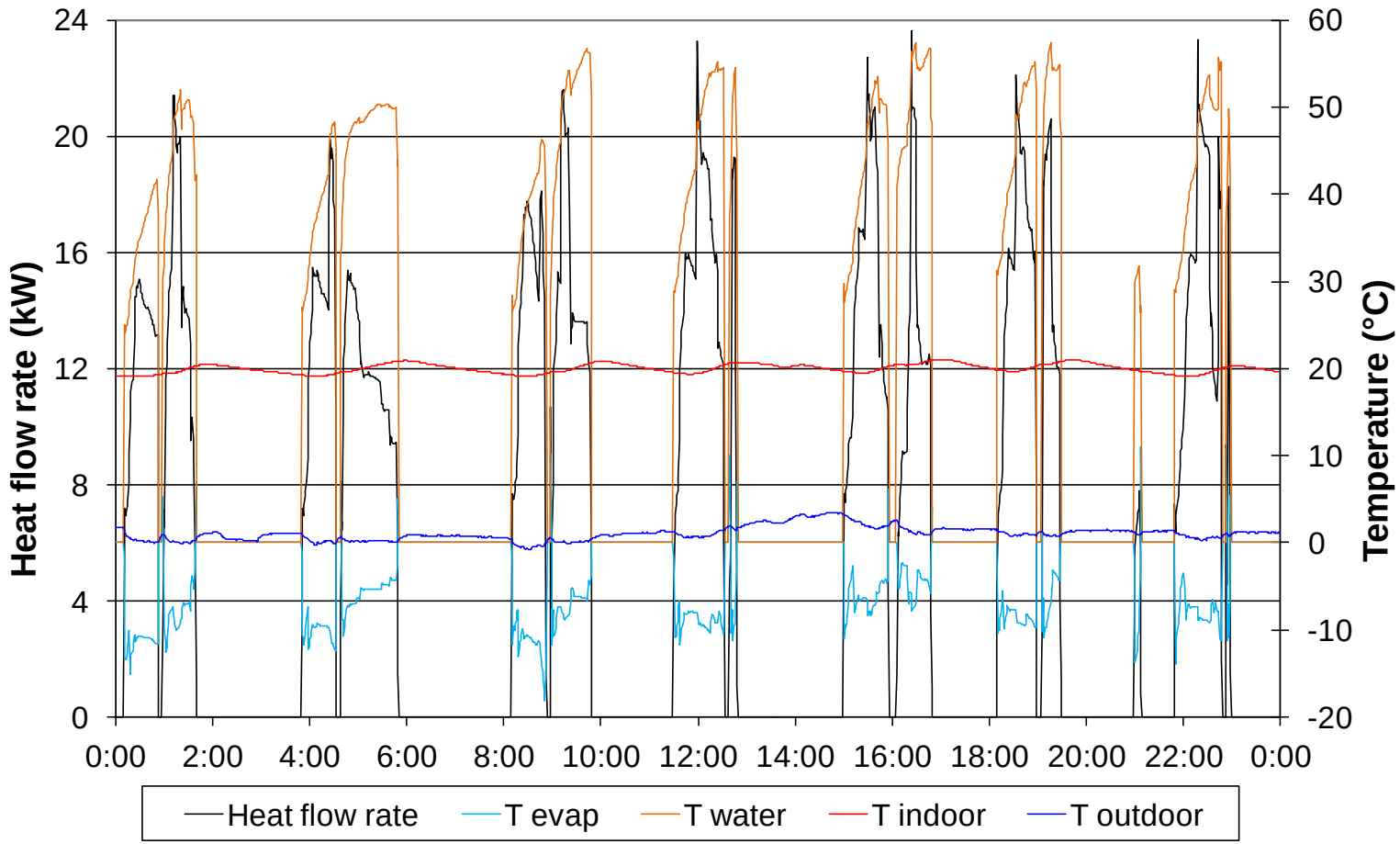

Cascade cycle HP: Results

UMONS RESEARCH INSTITUTE FOR ENERGY

- Data of December 12, 2013 (space heating)

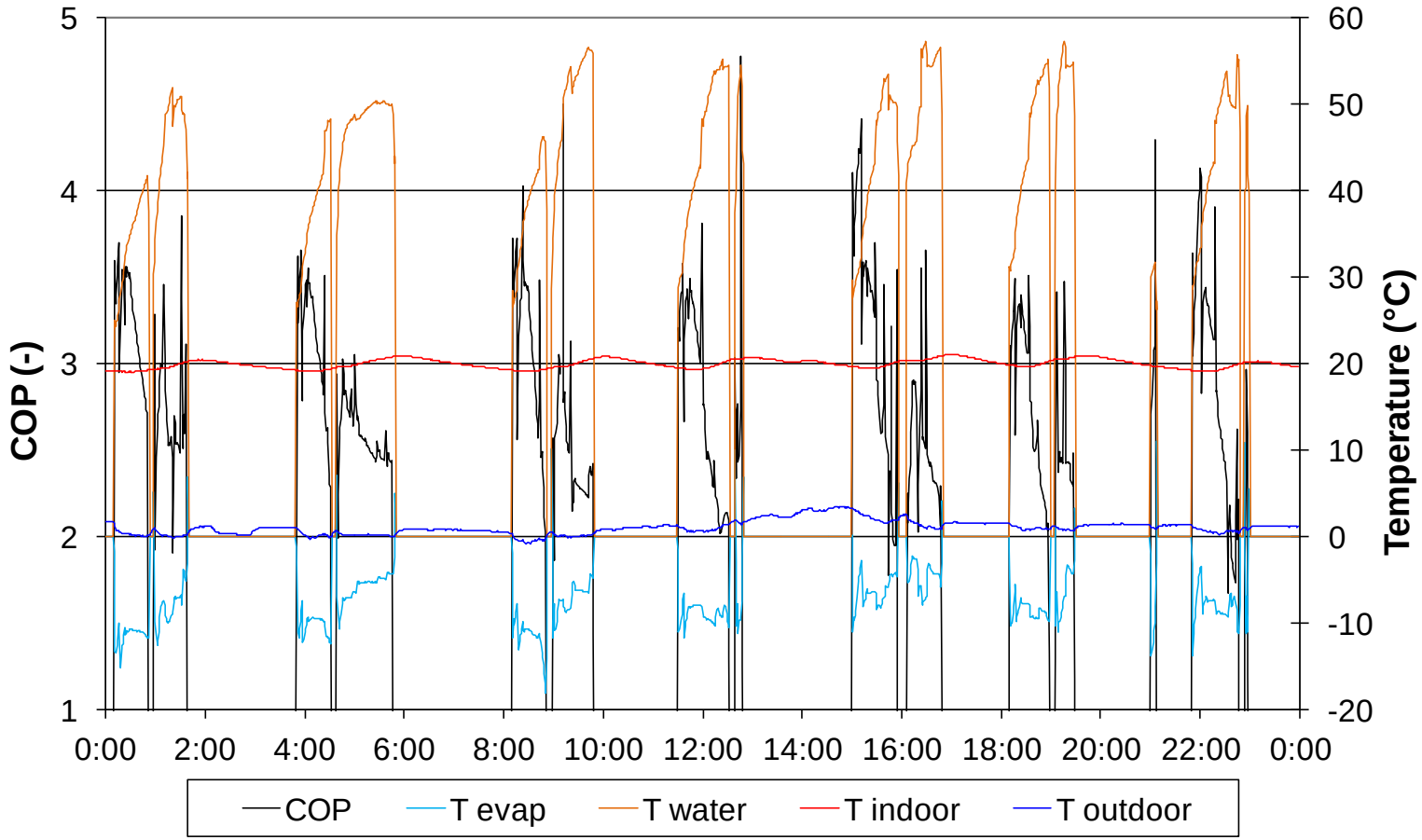

Cascade cycle HP: Results

energy
UMONS RESEARCH INSTITUTE FOR ENERGY

- Daily average COP for period October 2013 – August 2014 (space heating)
- $T_{WATER} = 60-1.75*T_{OUTDOOR}$

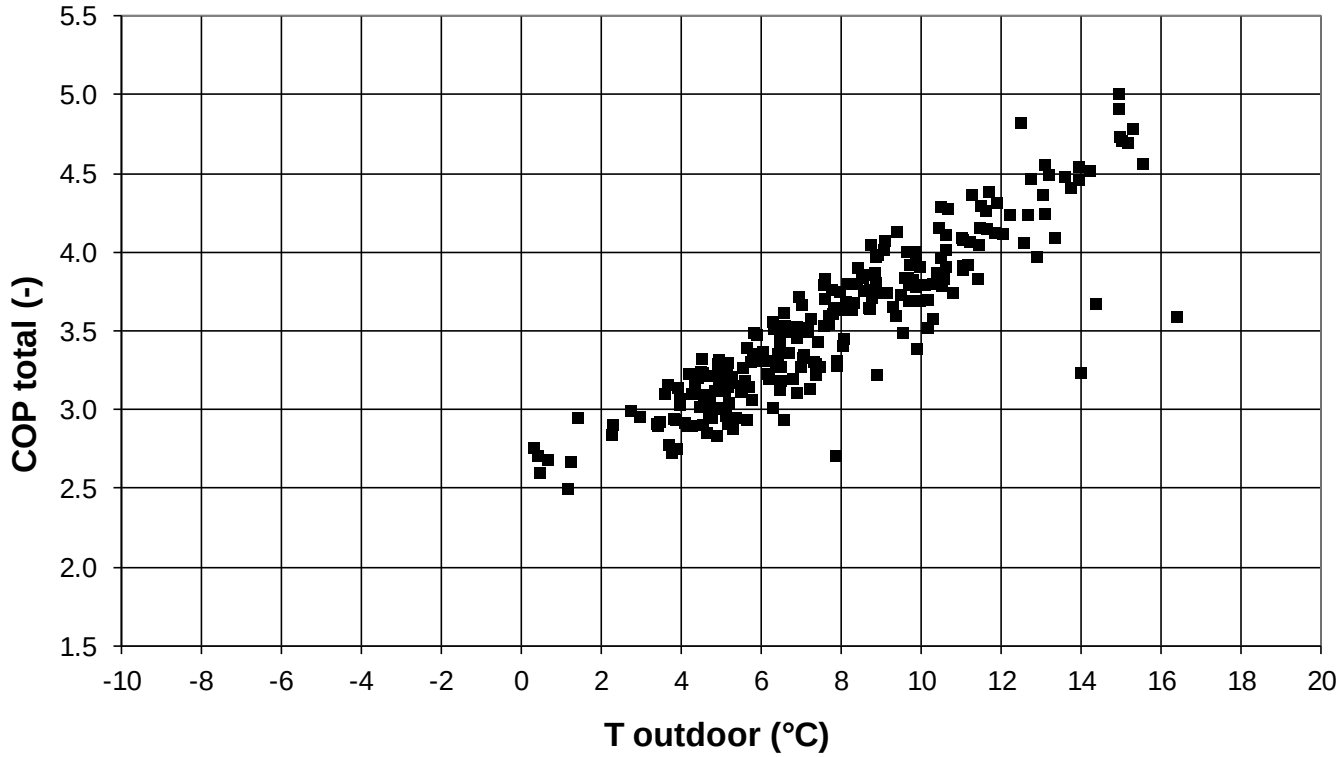

Cascade cycle HP: Results

energy
UMONS RESEARCH INSTITUTE FOR ENERGY

- Month by month data for period October 2013 – August 2014 (space heating)

Month	E_{HP} (kWh)	E_{WP} (kWh)	E_{DEF} (kWh)	E_{SB} (kWh)	Q (kWh)	$COPM_{SYS}$ (-)	$COPM_{TOT}$ (-)
October	135.1	4.0	0.0	7.0	521.5	3.75	3.57
November	650.9	15.5	1.2	15.9	2229.2	3.35	3.26
December	963.2	18.5	2.0	17.3	2953.3	3.01	2.95
January	942.4	19.9	1.1	16.2	3039.4	3.16	3.10
February	795.6	18.5	0.4	14.2	2679.1	3.29	3.23
March	313.7	8.4	0.2	19.9	1074.3	3.34	3.14
April	188.3	6.1	0.0	15.6	714.6	3.68	3.40
May	154.8	5.1	0.0	14.5	612.1	3.83	3.51
June	34.3	1.3	0.0	12.8	132.4	3.71	2.74
July	8.6	0.4	0.0	10.2	42.1	4.65	2.19
August	14.4	0.5	0.0	15.2	66.3	4.44	2.21
Year	4201.1	98.3	4.9	158.5	14064.2	3.27	3.15
	94.1% Heat pump	2.2% Water pump	0.1% Defrosting	3.6% Stand-by			

Cascade cycle HP: Results

energy
UMONS RESEARCH INSTITUTE FOR ENERGY

- Month by month data for period October 2013 – August 2014 (DHW)
- T_{WATER} = 55°C (week days) or 65°C (weekend)

Month	E_{HP} (kWh)	E_{WP} (kWh)	Q (kWh)	$COPM_{SYS}$ (-)
October	49.9	1.5	125.5	2.45
November	110.0	3.2	285.5	2.52
December	128.8	3.8	338.5	2.55
January	102.7	3.0	271.2	2.57
February	114.5	3.5	317.1	2.69
March	74.8	2.4	209.7	2.72
April	79.7	2.7	228.2	2.77
May	97.5	3.4	285.9	2.83
June	79.6	2.9	233.8	2.84
July	79.0	2.7	220.0	2.70
August	76.5	3.1	223.3	2.80
Year	992.8	31.9	2738.6	2.67
	96.9% Heat pump	3.1% Water pump		

Cascade cycle HP: Comparison

- Daily average COP (without Stand-by Energy, space heating)
- Cascade cycle HP is better than Injection cycle HP

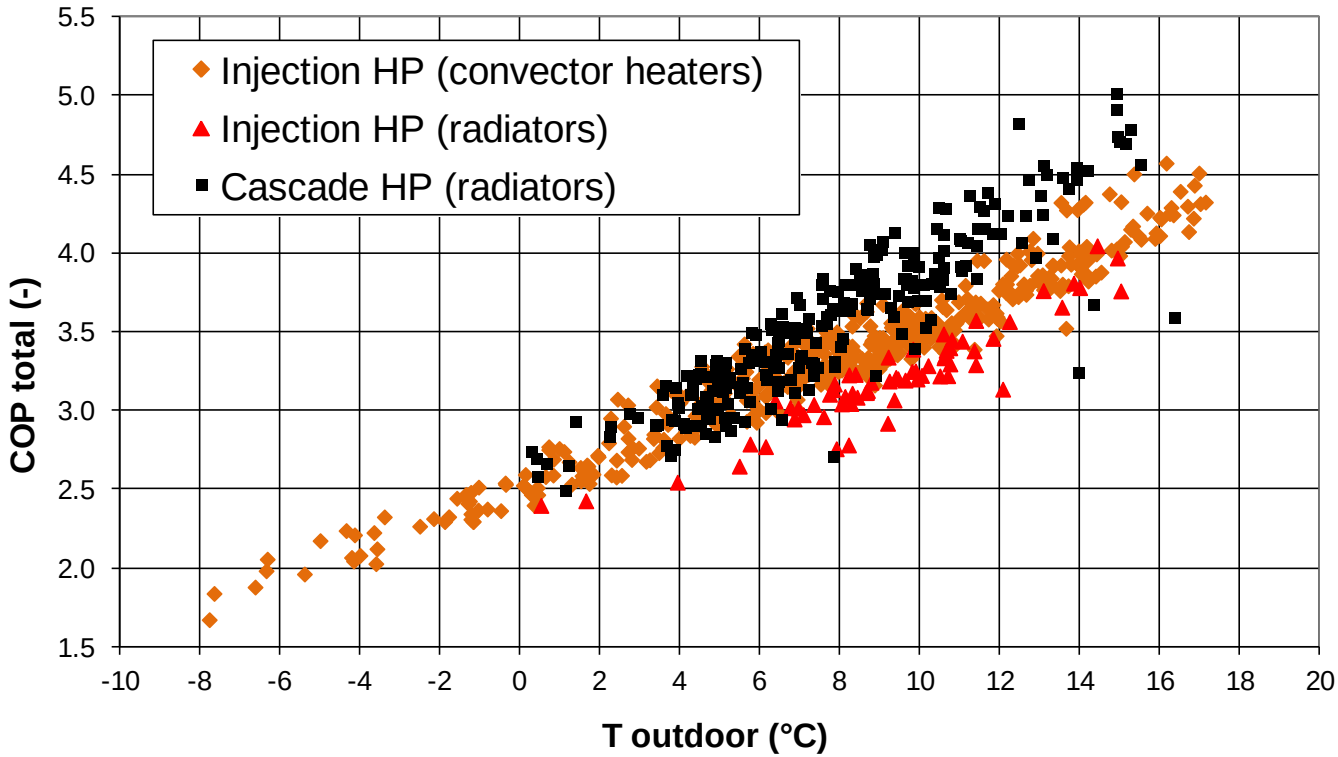

Conclusion

- Interesting field results :

SPF (space heating)	> 2.53 ? Yes !
	> 2.88 ? Maybe…
SPF (DHW)	> 2.6-2.7 ? Maybe too !

- HP system will be monitored during at least 2 years
- The model will be refined through field data analysis